PoE Lighting and IoT: Solving the Customer's Problems

Moderator

Bob Allan
Siemon Company

Panelists

Matt Scharkozy
Siemon Company

Dwight Stewart
Igor

Mike Barbara
Intersect Management

Bob Mobach
Consulting

About the Customer

New ground-up 88,000 sq ft cast-in-place concrete building in Pasadena, CA.

5-stories above ground

4 below grade parking levels

Serves as the customer's new headquarters

The building consists of research lab space, conferencing and food services area, and three working floors

Desire to design and install a system from the beginning with flexibility to evolve over time to support the evolution of technology for the future

Project Background

- The customer wanted to implement a **fully integrated** building
  - Improve facility management
  - Consolidated management platform
  - Flexible enough to implement ideas around user/employee and guest experience
  - Develop and utilize a Unified User Interface (UUI)
- Want to leverage the **cost effectiveness** and **lower energy** consumption of PoE
  - PoE Lighting
  - PoE Access Control
  - PoE Shades
  - PoE Security System
  - PoE A/V systems
  - PoE DAS and WAPs
  - PoE electro-chromatic interior glass
- Implement Intelligent Building control through a **single pane of glass** integration platform interface

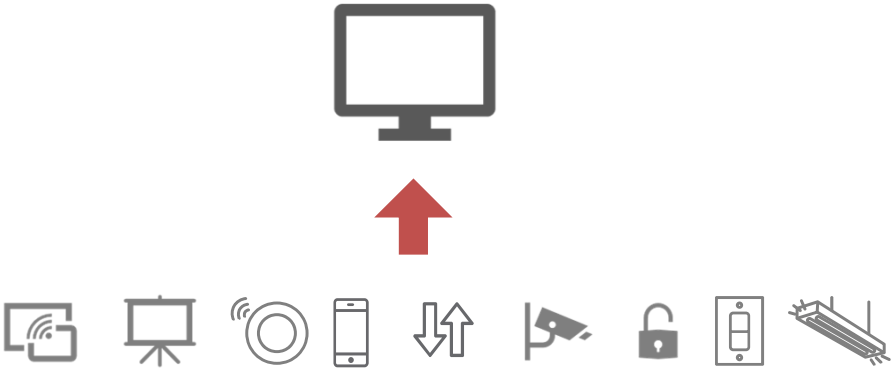

Key Project Statistics

55,000 Watts of PoE lighting load

2,500+ PoE connected fixtures

950+ Reels of category 6A cable exceeding **175 miles of cable**

100 Different lighting systems and configurations

60 Cisco UPoE switches to support lighting and other building edge devices

20 Different custom Light fixture manufacturers

2 150kW Active Power Flywheel UPS units

1 500kW Cummins indoor backup generator

Project Challenges and Considerations

EARLY COLLABORATION IS CRUCIAL

When changing from traditional electrical trades and engineering to a more collaborative approach of teaming and sharing workload between Low Voltage contractors and Electricians is crucial to get an early start.

- A different approach to zoning design and sensor connections impacted the wiring schemas
- Light switches, occupancy sensors, and other edge devices now require a low voltage connection with PoE

MORE STAKEHOLDERS MUST COLLABORATE FOR PROPER DEPLOYMENT

Lighting designers and engineers were still responsible for the building design, but now more collaboration with manufacturers and contractors was needed to ensure a proper design and deployment.

- To ensure success and due to the importance of emergency lighting, including exit signs, there was a need to have in-depth design collaboration and pro-active educational sessions with the AHJ

“PoE of Everything” can be a lofty goal!

- Larger industrial type doors or dual doors may not be able to meet current UPoE
- Fail safe fire exits need additional components and design integration
- Complex lighting systems and custom systems require driver coordination and verification
- Security systems, including emergency phones and public safety systems, now reside on an IP platform that needs “always on” functionality.
- AV and sound masking systems need to be addressed early to ensure PoE compatible systems are specified
- Mechoshade systems need to be carefully factored into the PoE load and physical network design as well as IT coordination
- IT Space needs to be budgeted appropriately
- Centralized UPS and generators are designed for emergency back up and survivability for all the PoE systems to achieve Tier and TIER-III levels

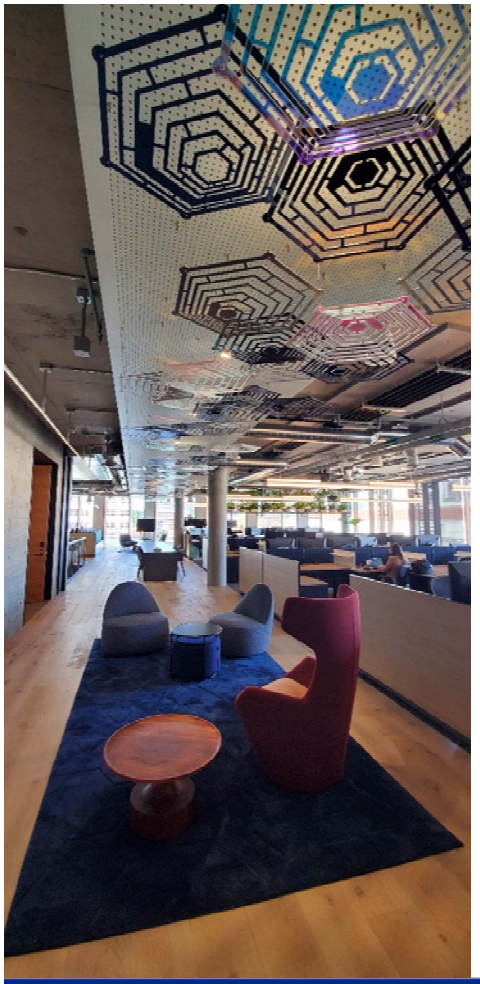

Keys to Success

- Foster **a team approach** from the beginning – driven by the customer
- **Expect pushback** from the traditional trades
- **Communicate early and often** with the customer ensuring their design intent is followed and all the stakeholders are continuing to support an IB
- **Educate!** Creating workshops, additional site visits, introduce industry experts, and review the design regularly

How it Works

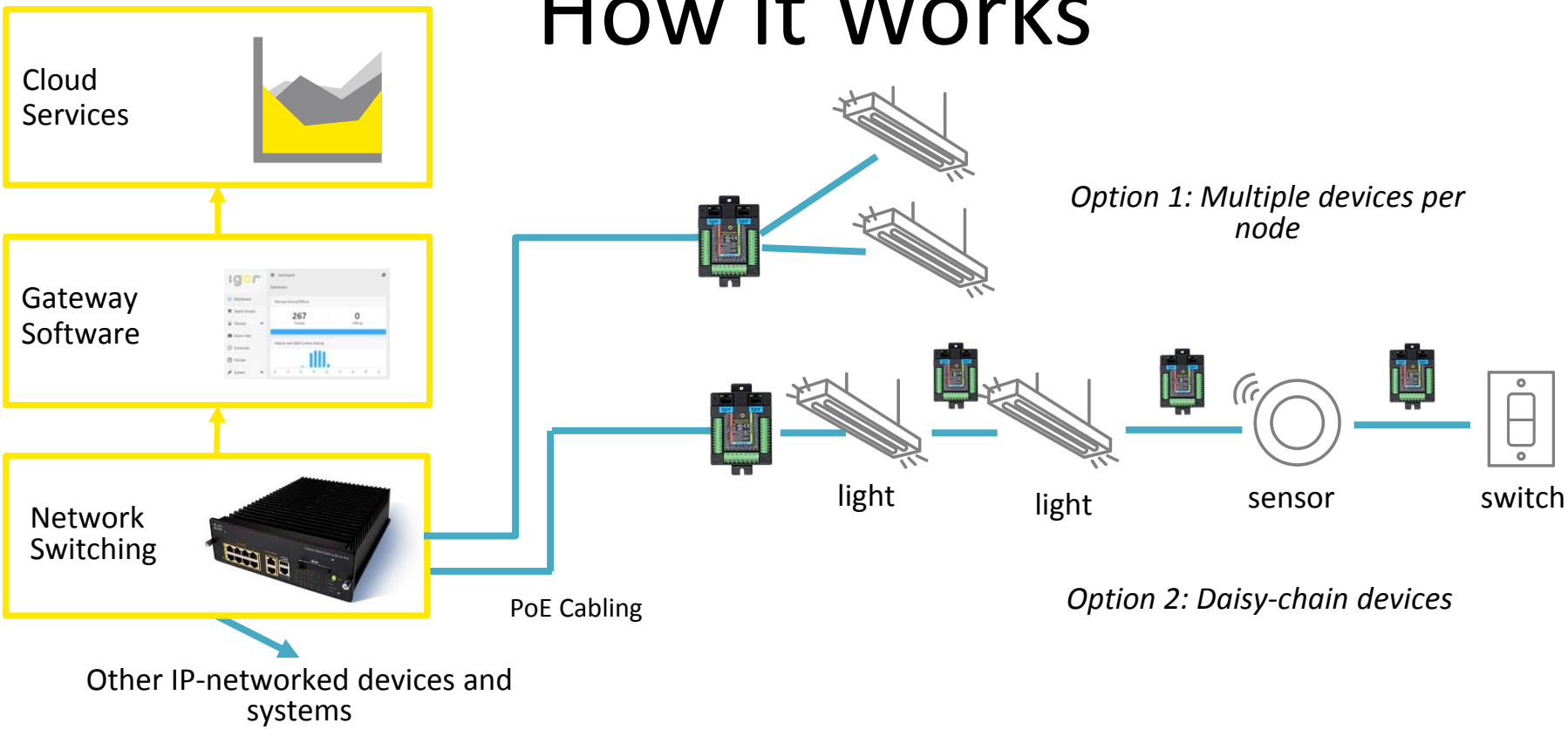
Cloud Services
Gateway Software
Network Switching
PoE Cabling
Other IP-networked devices and systems
Option 1: Multiple devices per node
light
light
sensor
switch
Option 2: Daisy-chain devices

Project Outcome

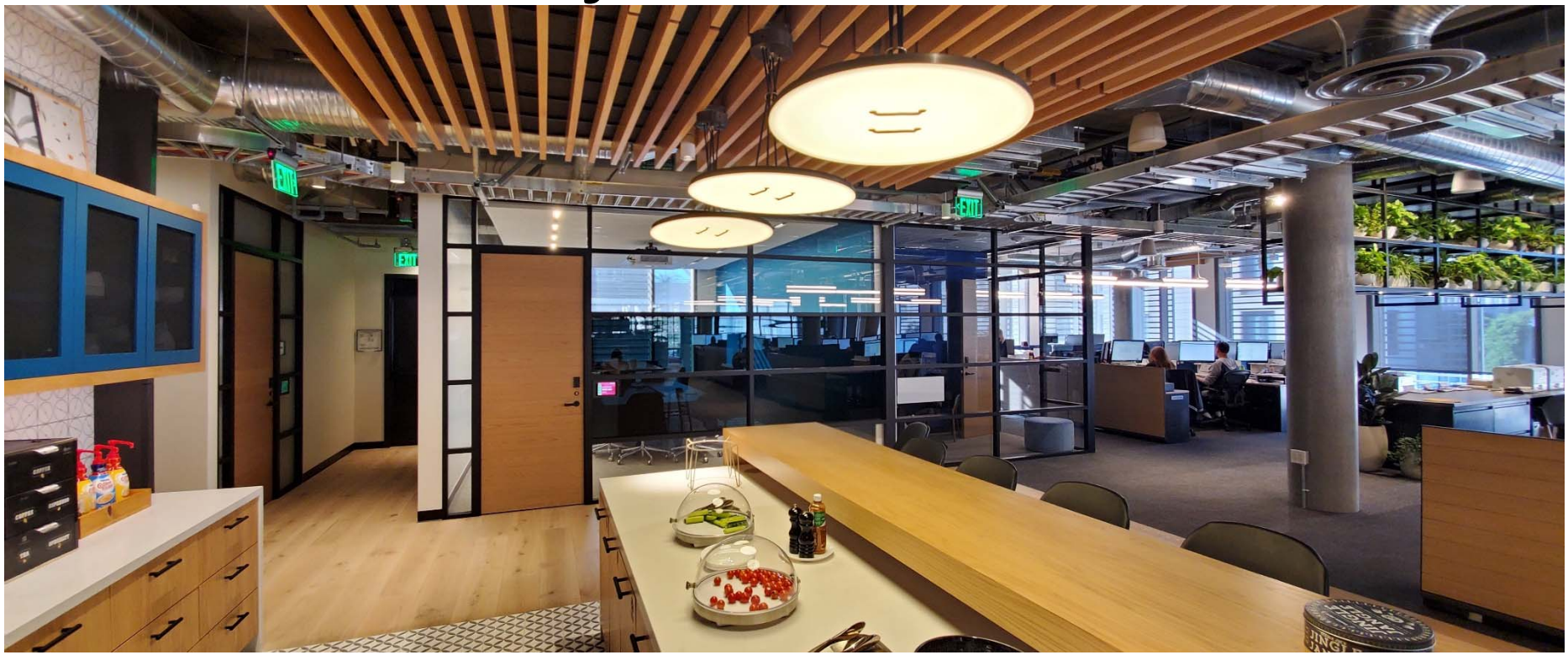

Project Outcome

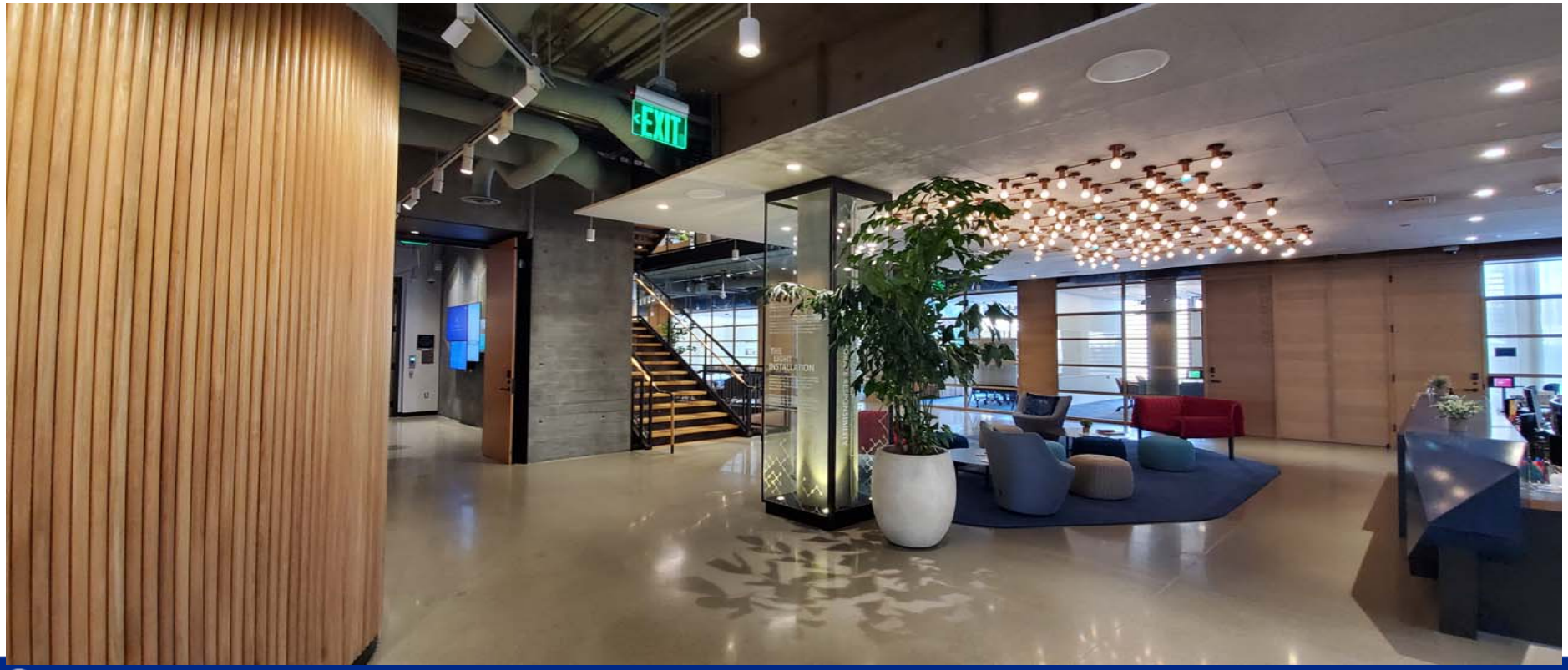

Project Outcome

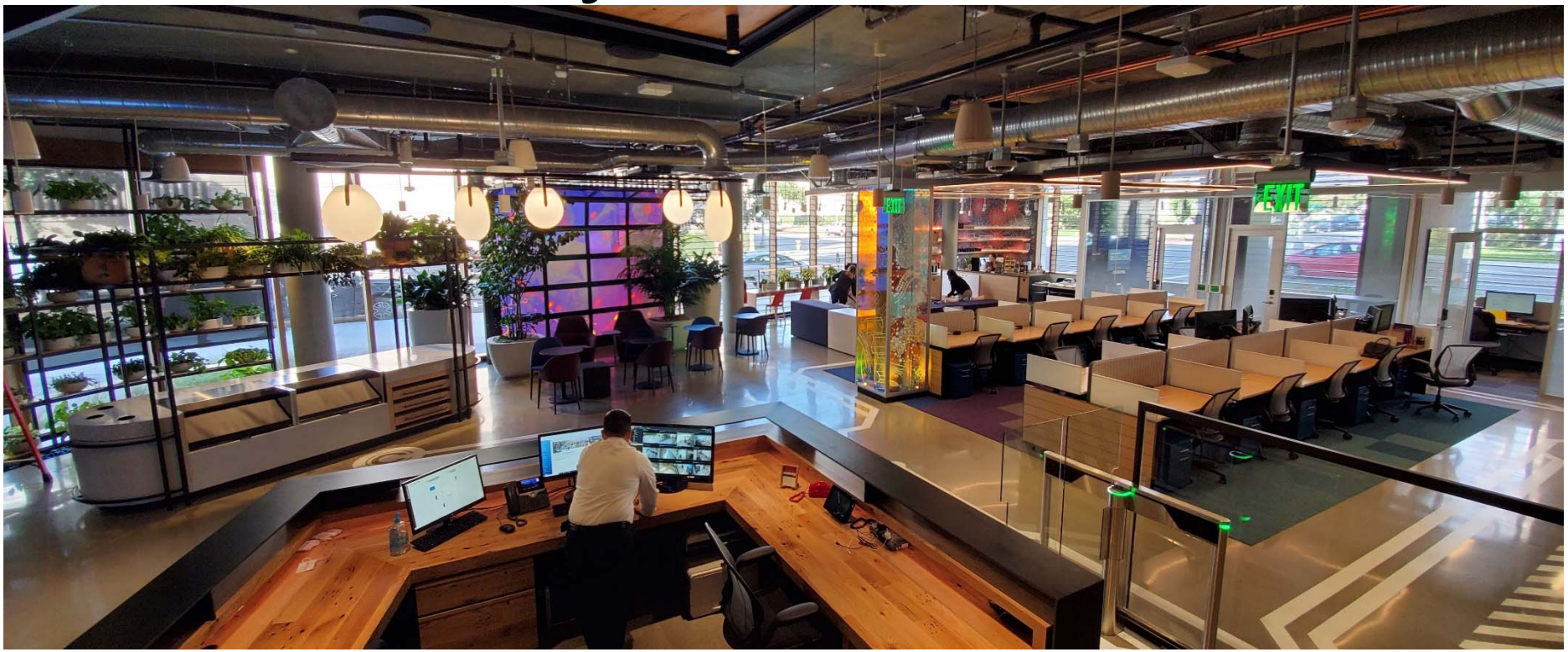

How does IoT impact the smart building design elements ?