Remote Power: PoE vs. Powered Fiber Understanding the Difference

Jamey O. Calloway, RCDD
Optical Cable Corporation

Overview

- Applications for PoE/Powered Fiber
- Basic Terms
- Limitations of PoE/Powered Fiber
- Key Features of PoE Systems
- Planning and Deployment Considerations
- PoE vs. Powered Fiber

Applications for PoE/Powered Fiber

- Wi-Fi Access Points
- 5G Active Antenna Systems
- LED Lighting
- IP Cameras
- IoT Devices

4-Pair Category Cable (PoE)

Powered Fiber (Fiber/Copper Hybrid Cable)

Basic Terms/Calculations: Electronics 101

Unit Name	Unit Symbol	Quantity
Ampere (Amp)	A	Electric Current (I)
Volt	V	Voltage (V) Electromotive Force (E)
Ohm	Ω	Resistance (R)
Watt	W	Electric Power (P)

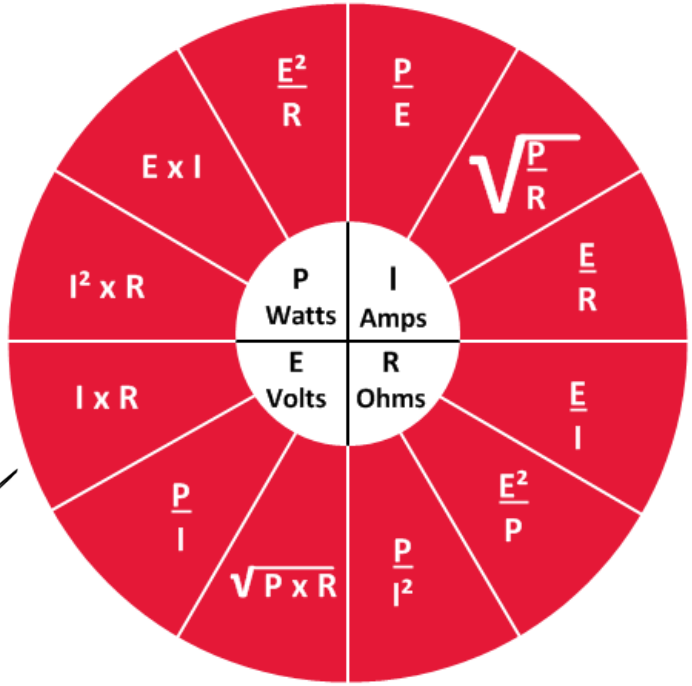

Ohm's Law Wheel

Basic Terms

- **Hybrid Cable:** A cable that contains both copper and optical fiber under one jacket
- **Powered Fiber:** Another term for hybrid cable
- **Remote Power:** A method of powering a device from a centralized location using PoE or hybrid cable, instead of a local AC power source
- **PSE:** Power Sourcing Equipment (ex. Ethernet PoE Switch)
- **PD:** Powered Device (ex. WAP, IP Camera)

Limitations of PoE and Powered Fiber

- DC Voltage Range:
  - Max Voltage: 60 VDC or less (SELV/safety extra low voltage) defined by IEC 60950-1 and NEC Class 2 power source limitations
- Power: 100VA (100 Watts)
- Distance: 100 Meters (PoE Only)
- Bundle Size:
  - TIA TSB-184-A
  - NEC 725.144

NEC Class 2 Power Source Max Rating (60VDC)

- 100VA (100 Watts)
- Max operating current = 100 W/ Vmax
  Ex.100 W / 60 VDC = 1.66 A
  - Class 2 power supplies generally limited to 57 V max: 1.75 A
- Reference NEC Table 11 (B) Class 2 and Class 3 Direct-Current Power Source Limitations

IEEE 802.3bt PoE Standard Key Features

- Detection
  - Determines whether a valid device capable of receiving PoE is connected before applying power
- Classification
  - Determines how much power the device requires and power availability
- Start-up
- Operation
- Disconnection

Design protocols to ensure safe, orderly operation and to address abnormal events, such as power overload, etc.

What's New in the Latest PoE Standard?

- More Power at the PSE – Up to 90 Watts
  - 3X previous 802.3at Standard
- Supports Power Delivery Over 4-Pairs
- Intelligence
  - Better power management
- Efficiency – Lower Standby Current
  - Important for applications such as PoE lighting
- Optional Extended Power Mode
  - Up to 90 Watts may be supplied to PD for known channel lengths <100 meters

IEEE PoE Standards

IEEE PoE Standard	TYPE	CLASS	PAIRS	PSE PWR OUT (W)	PD PWR MIN (W)	Imax/Pair	DC Loop Resistance (Ω)	PSE VOUTmin	PD Vin
802.3af (2003)	1	0	2	15.4	12.95	0.350	20	44	37.00
	1	1	2	4	3.84	0.091	20	44	42.18
	1	2	2	7	6.49	0.159	20	44	40.82
	1	3	2	15.4	12.95	0.350	20	44	37.00
802.3at (2009)	2	4	2	30	25.5	0.600	12.5	50	42.50
802.3bt (2018)	3	1	2	4	3.84	0.080	12.5	50	48.00
	3	2	2	7	6.49	0.140	12.5	50	46.36
	3	3	2	15.4	12.95	0.308	12.5	50	42.05
	3	4	2	30	25.5	0.600	12.5	50	42.50
	3	5	4	45	40.0	0.450	12.5	50	44.38
	3	6	4	60	51.0	0.600	12.5	50	42.50
	4	7	4	75	62.0	0.721	12.5	52	42.99
	4	8	4	90	71.3	0.866	12.5	52	41.18

Power Delivery Over 4-Pair Cabling

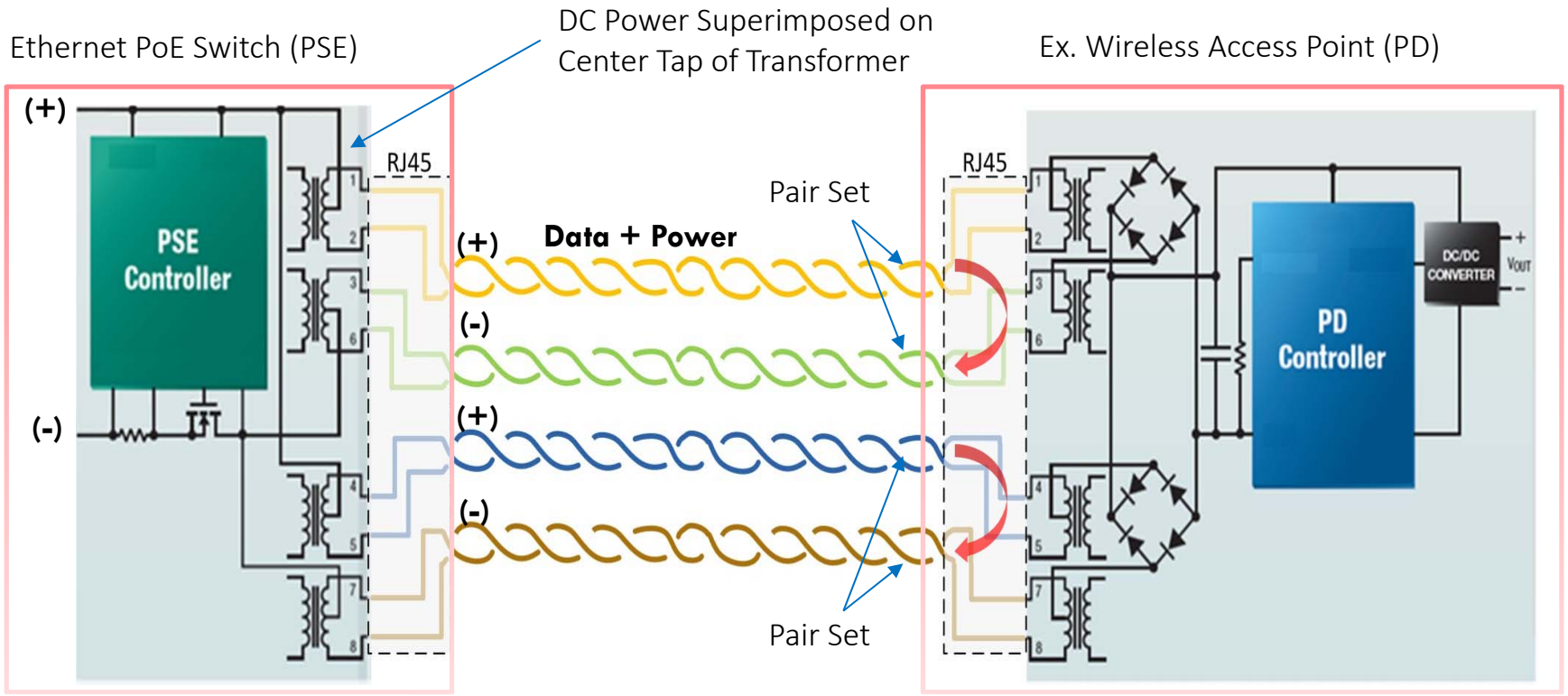

DC Loop Resistance

ANSI/TIA-568.2-D Clause 6.3.1
Category 3 through Category 6A DC Loop Resistance

- DC loop resistance for category 3, 5e, 6, and 6A channels shall not exceed 25Ω at any temperature from 20 °C to 60 °C

IEEE 802.3bt Standard
Channel maximum DC pair loop resistance

- Type-1: Max DC loop resistance = 20 Ohms
- Type-2-4: Max DC loop resistance = 12.5 Ohms

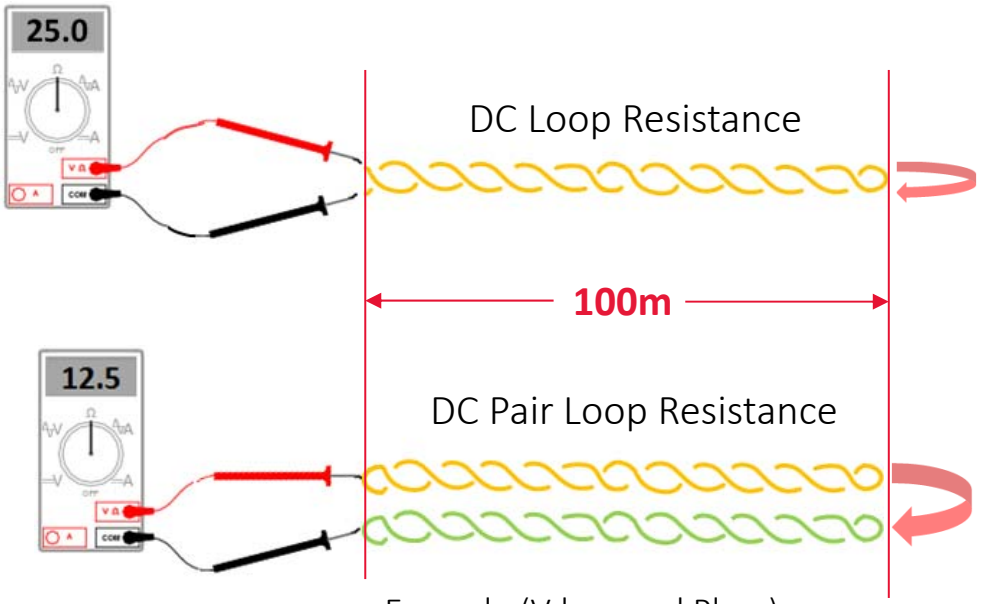

Example (Vdrop and Ploss)
600 mA * 12.5Ω = 7.5 V
600 mA² * 12.5Ω = 4.5 W

Power Calculation: Class 8 Example

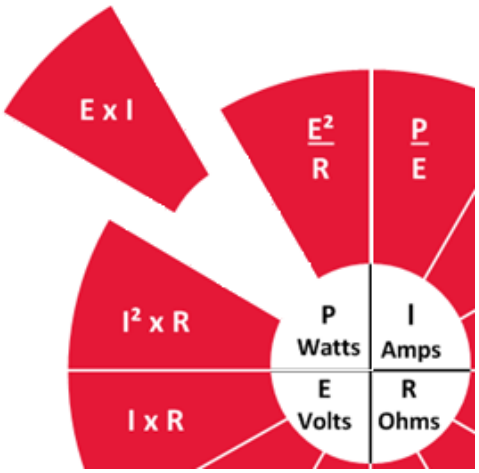

52 V (MIN) * 866 mA (MAX Current) = 45.03 W Per Pair Set

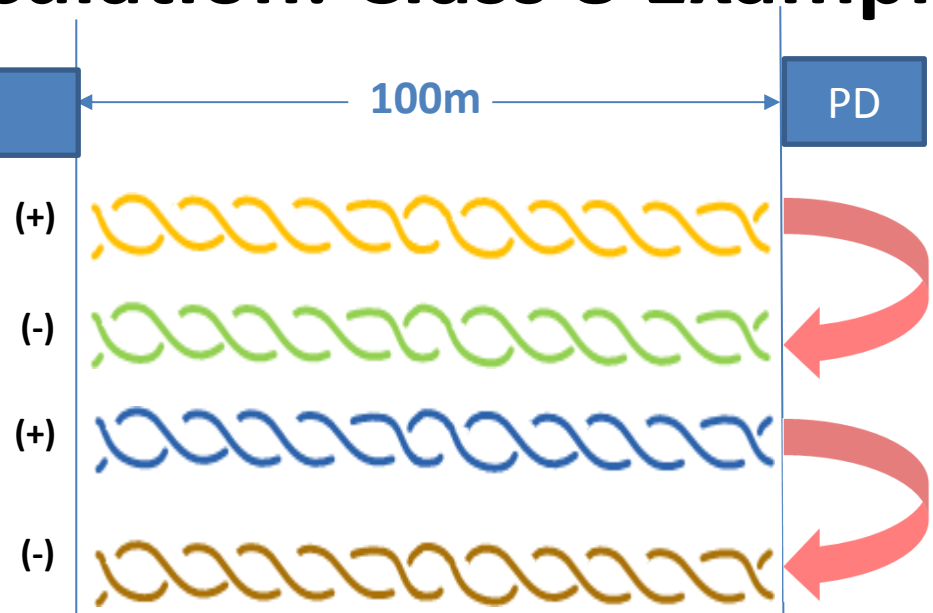

Voltage Drop and Power Loss
866 mA * 12.5Ω = 10.82 V
10.82 V * 866 mA = 9.37 W

45.03 W – 9.37 W = **35.66 W**

= **71.3 W**

45.03 W – 9.37 W = **35.66 W**

90.06 W – 18.74W = 71.3 W

52V-10.82V = 41.18V
41.18 V * 866 mA = 35.66 W
35.66 W * 2 pair sets = 71.3 W

Cable Bundle Size Limitations

- National Electrical Code (NEC) 2017 edition introduced section 725.144 with requirements for transmission of power and data
- NEC 2020 edition provides clarifications
  - Compliance with Table 725.144 shall not be required for installations where conductors are 24 AWG or larger and the rated current per conductor of the power source does not exceed 0.3 amperes.
  - 725.144 Informational Note No.4: See TIA-TSB-184-A-2017, Guidelines for Supporting Power Delivery Over Balanced Twisted-Pair Cabling, for information on installation and management of balanced twisted-pair cabling supporting power delivery.

NEC Table 725-144

Number of 4-Pair Cables in a Bundle																		
AWG	1-7			8-19			20-37			38-61			62-91			92-192		
	Temp Rating (°C)			Temp Rating (°C)			Temp Rating (°C)			Temp Rating (°C)			Temp Rating (°C)			Temp Rating (°C)		
	60	75	90	60	75	90	60	75	90	60	75	90	60	75	90	60	75	90
26	1.00	1.23	1.42	0.71	0.87	1.02	0.55	0.68	0.78	0.46	0.57	0.67	0.45	0.55	0.64	NA	NA	NA
24	1.19	1.46	1.69	0.81	1.01	1.17	0.63	0.78	0.91	0.55	0.67	0.78	0.46	0.56	0.65	0.40	0.48	0.55
23	1.24	1.53	1.78	0.89	1.11	1.28	0.77	0.95	1.10	0.66	0.80	0.93	0.58	0.71	0.82	0.45	0.55	0.63
22	1.50	1.86	2.16	1.04	1.28	1.49	0.77	0.95	1.11	0.66	0.82	0.96	0.62	0.77	0.89	0.53	0.63	0.72

Table 725.144 Ampacities of Each Conductor in Amperes in 4-Pair Class 2 or Class 3 Balanced Twisted-Pair Cables Based on Copper Conductors at an Ambient Temperature of 30°C (86°F) with All Conductors in All Cables Carrying Current, 60°C (140°F), 75°C (167°F), and 90°C (194°F) Rated Cables

Current Values in Table 725-144 are Per Conductor
Current Values in TSB-184A are Per Pair

TIA TSB-184-A, Guidelines for Supporting Power Delivery Over Balanced Twisted-Pair Cabling

Maximum bundle size for 15 °C (27°F) temperature rise @20°C (68°F) ambient									
	26 AWG		**Category 5e (24 AWG)**		**Category 6 (23 AWG)**		**Category 6A (23 AWG)**		**28 AWG**
Current/ pair set	Air	Conduit	Air	Conduit	Air	Conduit	Air	Conduit	Air
600mA	141	79	214	146	281	205	349	272	88
720mA	86	45	136	90	183	128	227	171	53
1000mA	33	16	58	36	81	53	101	71	21

TIA TSB-184-A, Guidelines for Supporting Power Delivery Over Balanced Twisted-Pair Cabling

Maximum bundle size for 15 °C (27°F) temperature rise @30°C (86°F) ambient									
	26 AWG		**Category 5e (24 AWG)**		**Category 6 (23 AWG)**		**Category 6A (23 AWG)**		**28 AWG**
Current/ pair set	Air	Conduit	Air	Conduit	Air	Conduit	Air	Conduit	Air
600mA	134	74	204	139	269	195	334	259	83
720mA	81	43	130	86	174	122	217	163	51
1000mA	31	15	55	34	77	50	96	67	19

When planning new installations delivering remote power, category 6A or higher performance 4-pair balanced twisted-pair cabling as specified in ANSI/TIA-568.2-D is recommended.

Installation Guidelines

- Higher categories of cabling with lower dc loop resistance help minimize system losses
- Limit cable temperature rise to 15 °C (27°F) to minimize long term degradation of the cable
- Lower DC resistance will experience less power loss over the cable and will deliver power more efficiently
- Allowing for 15°C temp rise for typical 60°C rated cables, ambient temperature should not exceed 45°C (113°F) for lengths of 1 meter or greater

What is Powered Fiber?

- Fiber/Copper Hybrid Cable
  - Fiber for data
  - At least 2 conductors for DC power
- Not limited to 100 meters
  - Distance limited by voltage drop/conductor size
- Power delivered over separate, larger copper conductors (12-22 AWG)
  - UL 13, Power-Limited Circuit Cables, table 5.1 conductor size (12-30AWG)

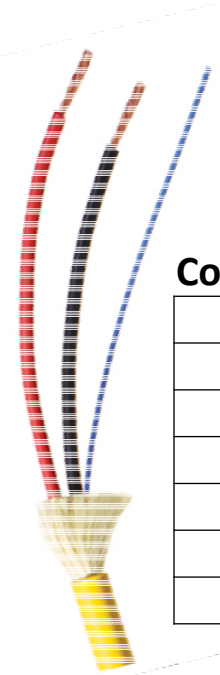

Conductor Resistance @20 °C

AWG	Ohms/1000Ft
12	1.6
14	2.5
16	4.0
18	6.3
20	10.1
22	16.1

Powered Fiber: Design Considerations

- Powered Device: Power consumption and max current draw (Amps)
- Power Source: Output power (Watts)
- Voltage drop and power loss budget
- Conductor size determined by distance and/or power requirement at PD

Powered Fiber Example

Max Distance for Known Power Level

Supply Voltage: 57 VDC @1.75 A
= 99.75 W

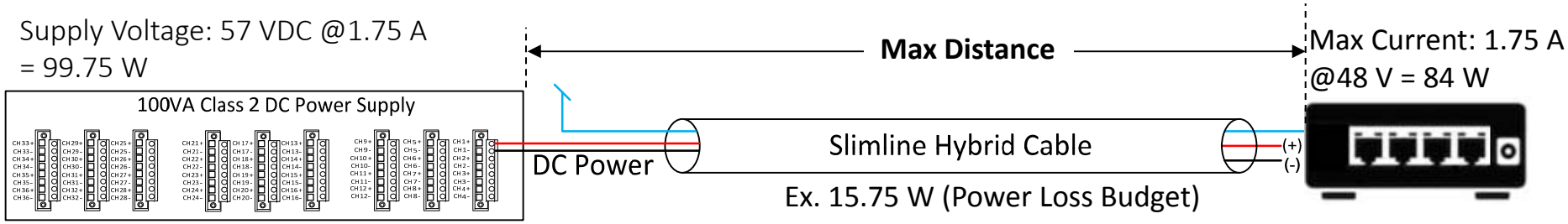

99.75 W – 84 W = 15.75 W
(Loss budget)
15.75 / 1.75² = 5.14 Ω
OR
57 V – 48 V = 9 Vdrop
9 V / 1.75 A = 5.14 Ω

AWG	Ohms/ 1000Ft	MAX DIST
12	1.6	1,606
14	2.5	1,028
16	4	643
18	6.3	408
20	10.1	254
22	16.1	160

Calculate Max Distance for Wire Gauge (Ex. 20AWG)
20AWG = 10.1 Ω/1000Ft
(5.14 / 10.1) * 1000 = 509Ft
509 / 2 = 254Ft
Note: Must divide distance in half to account for return path

Powered Fiber Example

Max Power for Known Distance

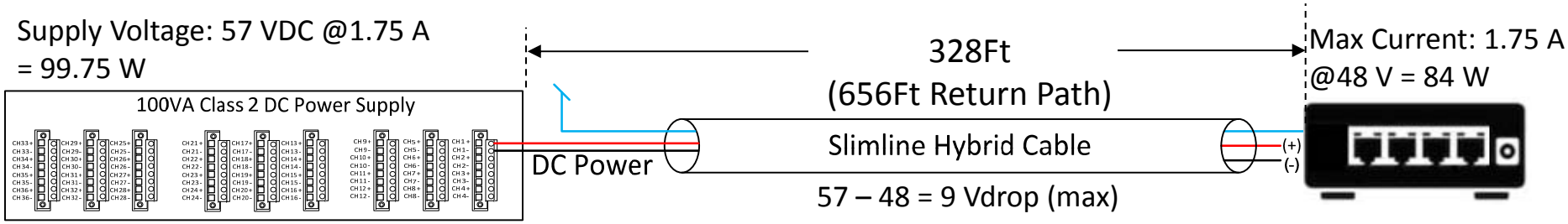

Conductor Size for Known Distance (ex. 328FT)

- Conductor Resistance (including return path) x $1.75A^2$ = Power Loss (Ploss)
- Ambient temp: 20°C

AWG	Ohms/ 1000Ft	Ohms/ 656Ft	Vdrop	Ploss	PD Max Power Consumption
12	1.6	1.05	1.84	3.22	96.53
14	2.5	1.64	2.87	5.02	94.73
16	4.0	2.62	4.59	8.03	91.72
18	6.3	4.13	7.23	12.65	87.10
20	10.1	6.63	11.60	20.30	79.45
22	16.1	10.56	18.48	32.34	67.41

Powered Fiber + PoE:

Complementary Solutions

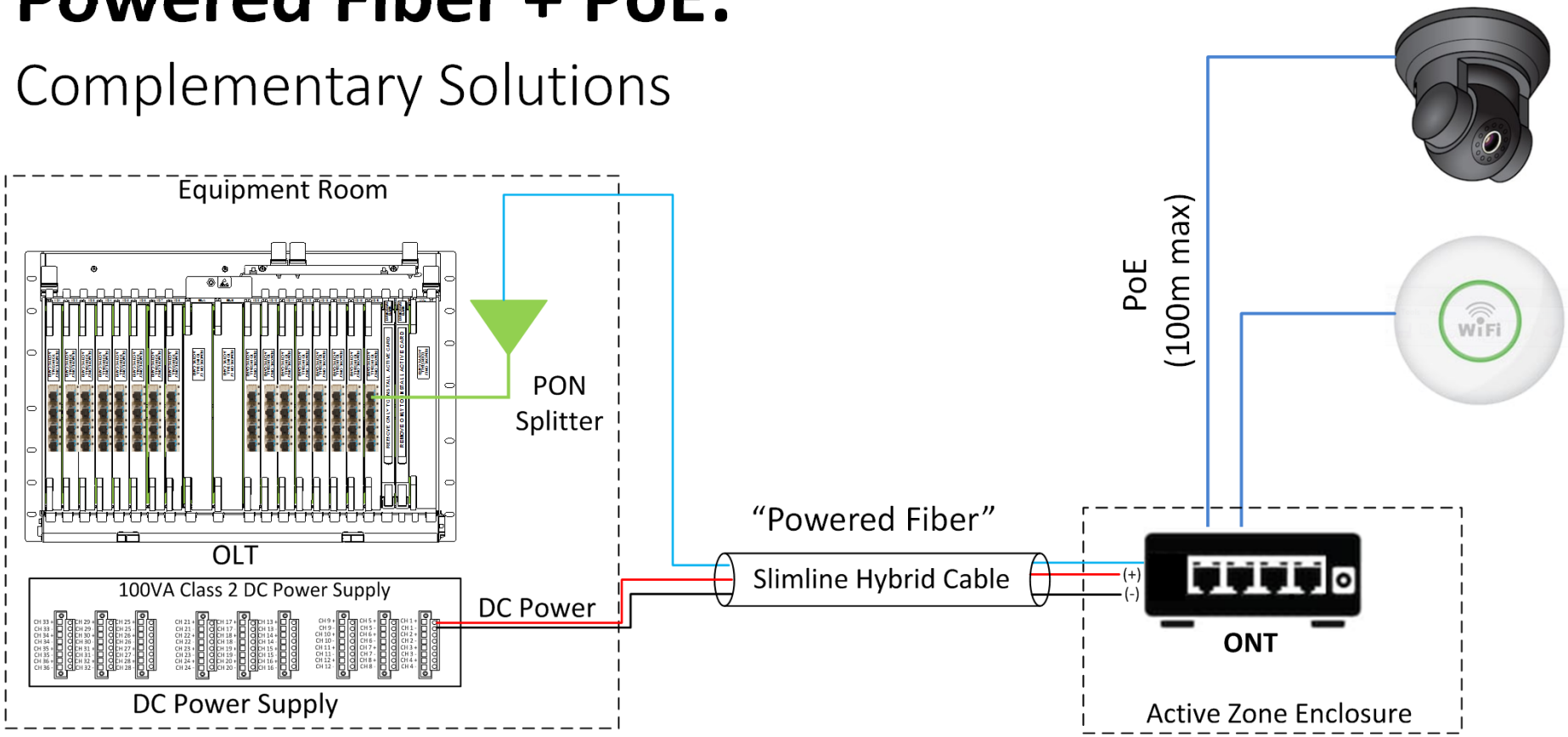

Powered Fiber + PoE Example

Powered Fiber (12AWG Copper)

- 99.75 W – 3.22 W = 96.53 W (to PD)
- PD Power Consumption: 16 W (MAX)
- 80 W Power Available for PoE
- Total Distance: 200m

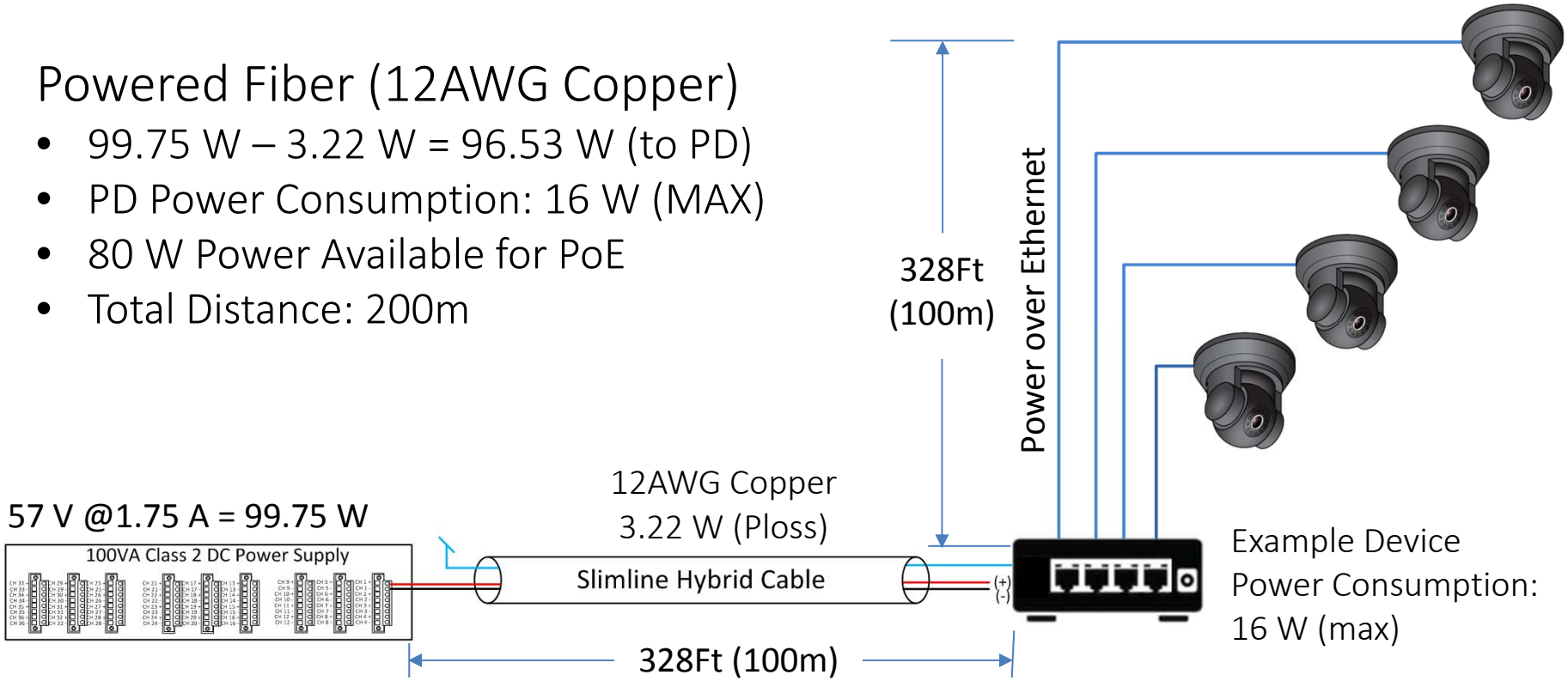

Summary

- PoE is a standards-based plug and play application, powered fiber is more flexible but requires additional design considerations
- Powered fiber extends the reach of remote power beyond 100 meters
- Powered fiber and PoE can co-exist as complementary solutions

Questions

For more information, please visit

www.occfiber.com